SURFACE FIXED DIGITAL GATE LOCK, SINGLE-SIDED

SPECIFICATION SHEET
BDGSW

- A marine grade Digital Gatelock with many unique features.
- Auto-latching – close the gate and the latchbolt latches into the gate frame. To open the gate – enter the code and turn the handle.
- No power needed – High quality digital keypads ensure long lasting durability.
- Latchbolt is adjustable in length for precise fitting on site.

PRODUCT DETAILS

Product code:	Description:
BDGSWL	Left handed, keypad on one side, inward opening
BDGSWR	Right handed, keypad on one side, inward opening
BDGSWLO	Left handed, keypad on one side, outward opening
BDGSWRO	Right handed, keypad on one side, outward opening

Latchbolt: Adjustable, moves 20mm (¾"). Auto-latching when gate closes.

Keep box included.
No power needed.

Right hand, inward opening lock shown

BDGW keep (supplied with lock)

INSTALLATION

1. Position Z bracket on edge of the gate (inside the gate for inward opening, outside for outward opening) in a suitable position (use the keep to ensure there is sufficient clearance) and mark 3 holes for the outside keypad fixing screws (top and bottom central holes) and the spindle (directly above bottom central hole). Drill 2x 8mm (¼") holes for the screws and a 12mm (½") hole for the spindle. Fix Z bracket to the gate using 3 screws supplied.
2. 'The keypad screws and spindles supplied are designed to fit standard gate thicknesses of 45mm and 75mm. (Note that a separate kit, BDGWE140, is used for gates above 75mm). For dimensions in between these, you may need to cut the parts to length. This can be done using a hacksaw or grinder. For the spindle, cut to gate thickness plus 90mm (3 1/2").
3. Fit the thread extenders to the separate keypad if required, then fix the keypad onto the gate with the M5 screws through the Z bracket. Insert spindle and ensure it can move freely within the gate. If it cannot move freely you may need to enlarge the hole.
4. Position lock on to the spindle and fix to the angle bracket using the stainless steel cover plate and the 2 x M8 countersunk screws. Screw on locking bolt, this may be adjusted as per point 6.
5. Mark the keep position on the gate post and fix using 4 screws supplied. Test and adjust accordingly.
6. ADJUSTMENT To adjust latchbolt length rotate the bolt as required for length and orientation, then insert 3mm long arm hex key (supplied) into end of bolt and turn clockwise to lock in place.

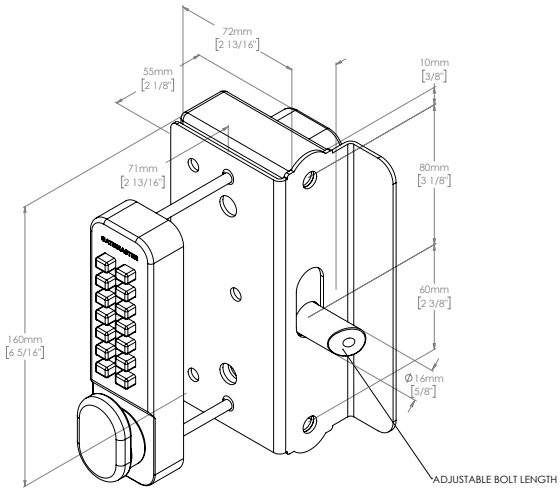

MAINTENANCE Lubricate with light oil periodically.

GATEMASTER

VISIT GATEMASTERLOCKS.COM FOR MORE INFORMATION

© Copyright Gatemaster 2023

SURFACE FIXED DIGITAL GATE LOCK

SPECIFICATION SHEET
BDGSW

LOCK CODE:

C _____

TO CHANGE THE CODE

1. Check the original code is working on the keypad.
2. For the separate keypad, skip to point 3. For the attached keypad, to remove the keypad off the lock, ensure the Z bracket is removed and then screw the 2 M8 fixing screws partway into the fixing holes at top and bottom of the lock. Tap the heads of the bolts downwards onto a surface and the outer rim of the lock will start to slide off the back. Remove this entirely and once off you can unscrew the two screws fixing the keypad to the panel.
3. Turn the keypad over and remove the 4 screws.
4. Lift off the covering panel carefully as there are 10 springs attached to this panel. Note that the red tumblers relate to the code shown above. Also note that the C tumbler is uncoloured and should not be removed.
5. To change the code hold the keypad with the code buttons down and depress & hold the C button (if this is not done you may damage some of the internal components). Reposition the tumblers to the new code (red tumblers are coded and blue tumblers are uncoded). Ensure that the square cut-out on each tumbler is facing the outside of the lock body, also ensure that the coloured mark is facing upwards. If any one tumbler is upside down or the wrong way round the lock will not work and if forced will break the internal components. The code must always start with a 'C'.

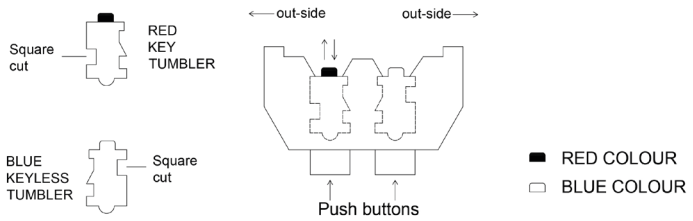

6. Replace the covering panel and tighten the 2 screws
7. The code is now changed, check to see that it is working correctly and make a note of the code for future reference. Once satisfied that the lock is working correctly refit keypads to the panel using the 2 screws and reassemble the lock.

MAINTENANCE

6 monthly:

1. Remove keypads from the lock.
2. Spray the inside of the lock thoroughly with WD40 or equivalent, through the tumbler holes at the back of the lock.
3. Spray all the fixing accessories and the latch with WD40 or equivalent.
4. Push each of the buttons and rotate the knob several times to make sure the lock is working smoothly.

GATEMASTER

VISIT GATEMASTERLOCKS.COM FOR MORE INFORMATION

© Copyright Gatemaster 2023